ITEM #

MODEL #

NAME #

SIS #

AIA #

Turbo Liquidizers
TBXPro with soup head, 1 speed



CC0H6D (DTBXPRO1T) TBX Pro Turboliquidizer with soup head, 1 speed, 1650 rpm, 380-415V, 3ph, 50Hz

Short Form Specification

Item No.

Constructed entirely in stainless steel and mounted on a trolley with 4 wheels with brakes. Fast and simple height adjustment (250mm range). Can be adapted to all types of pots. Equipped with tube and tool for mixing and blending soups and other semi-liquids or liquids. Safety device allows the machine to start only when in working position. All components of tube and head are in stainless steel and dishwasher safe (excluding bearings). 1 speed: 1650 rpm. The touch button control panel has IP65 protection with low voltage level.

APPROVAL:

Main Features

- Used to mix, blend and emulsify vegetable and soups, fruit and vegetable purées, liquid pastries, sauces and much more directly in cooking pots/containers.
- Appliance equipped with tube and tool for mixing and blending soups and other semi-liquids or liquids.
- Equipped with crank handle for fast and easy height adjustment.
- Mixer tube is easily removable without tools and can be dismantled in separate parts: tube, shaft, bearing and rotor.
- All components of tube and head are in stainless steel and dishwasher safe (excluding bearings).
- Safety device allows the machine to start only when it is in a working position.
- Suggested for pots containing up to 700 liters of liquid.
- Turbine accelerates the flow of the liquid over the impeller providing a greater throughput and finer grinding.

Construction

- 1 speed: 1650 rpm.
- 220-240V/50Hz/3-phase available on request.
- Power: 1500 watts.
- Constructed entirely in stainless steel to offer maximum durability.
- Mounted on a mobile stainless steel trolley (4 wheels with brakes). Storage position: fold down motor/arm to save space.
- Trolley with support to store up to two tubes (with assembled tool).
- CE approved (Machine Directive) with CB test report from third party notified body.
- IP65 waterproof control panel, IP23 throughout the entire machine.
- 250mm height adjustment range for the motor body. Different tube lengths allow to adapt to pot depths (see optional accessories).
- All parts in contact with food are conform to 1935/2004/EC.
- Equipped with 8 m power cord without plug.

Components

- 1 of **602298** (DTBXPRO1T) * NOT TRANSLATED *
  - **Shipping weight:** 94 kg
- 1 of **650172** (HSSTBL) TBX Pro soup head (without tube)
  - **Shipping weight:** 2 kg
- 1 of **650175** (T448) TBX Pro medium tube 448 mm
  - **Shipping weight:** 3 kg

Optional Accessories

- TBX Pro soup grid, hole diam. 8-10 mm — PNC 650168 ❑
- TBX Pro soup head (without tube) — PNC 650172 ❑
- TBX Pro puree head for Braising Pan (without tube) — PNC 650173 ❑
- TBX Pro medium tube 448 mm — PNC 650175 ❑
- TBX Pro long tube 568 mm — PNC 650176 ❑
- TBX Pro puree head (without tube) — PNC 650177 ❑
- TBX Pro soup grid, hole diam. 19 mm — PNC 653507 ❑
- TBX Pro soup head for Braising Pan (without tube) — PNC 653521 ❑
- TBX Pro short tube with deflector, 348 mm (recommended for Braising Pans) — PNC 653821 ❑

The company reserves the right to make modifications to the products without prior notice. All information correct at time of printing.

Turbo Liquidizers
TBXPro with soup head, 1 speed

Front

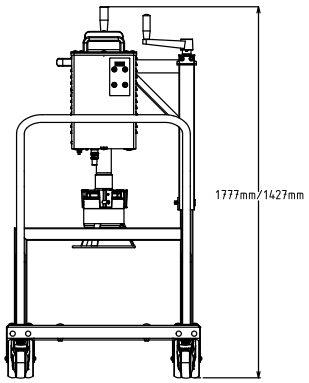

Side

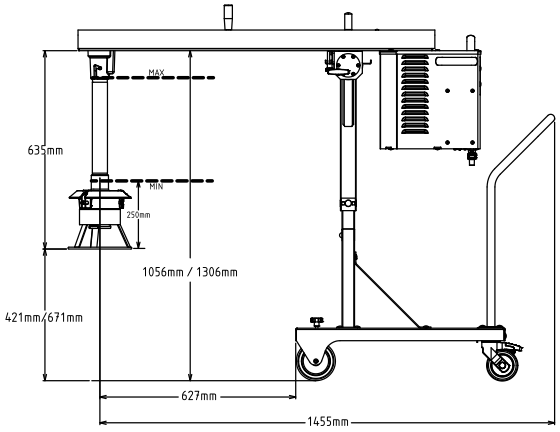

EI = Electrical inlet (power)

Top

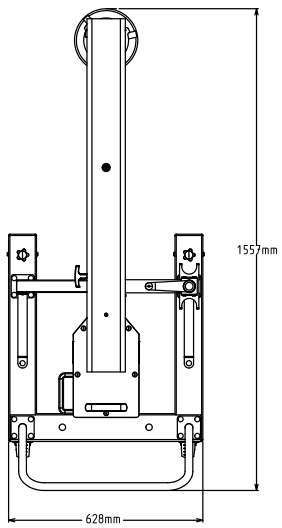

Electric

Supply voltage:	380-415 V/3 ph/50 Hz
Electrical power, max:	1.5 kW
Total Watts:	1.5 kW
Plug type:	Cable without plug

Key Information:

External dimensions, Width:	628 mm
External dimensions, Depth:	1557 mm
External dimensions, Height:	1427 mm
Net weight:	80 kg
Shipping weight:	
Height adjustment:	1122/1372 mm
Approvals	
Waterproof index:	IP23
Number of speeds:	1
Rotation speed:	

The company reserves the right to make modifications to the products without prior notice. All information correct at time of printing.

2026.11.19